SINGER

998E3 998E15

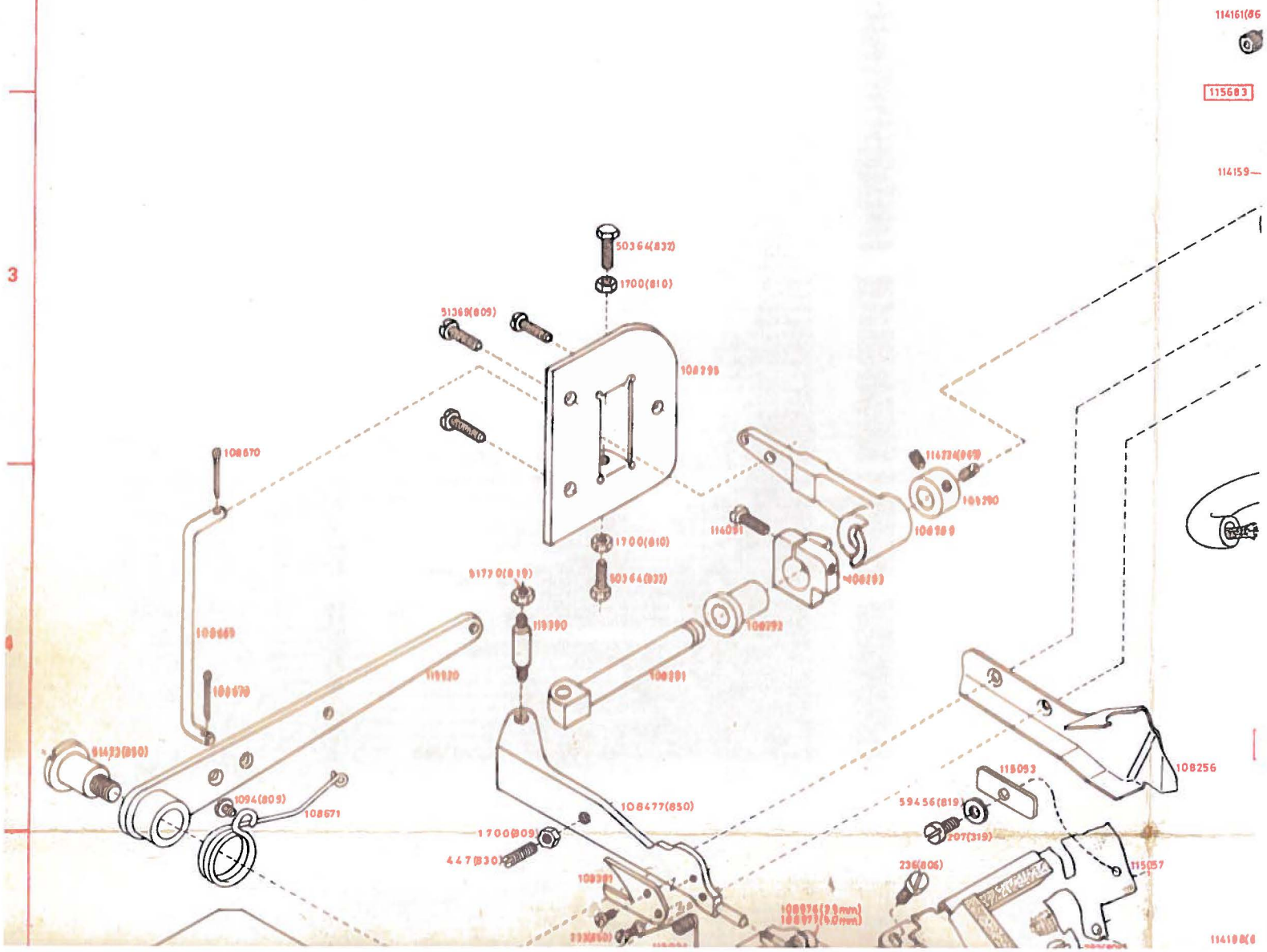

From the library of: Superior Sewing Machine & Supply LLC

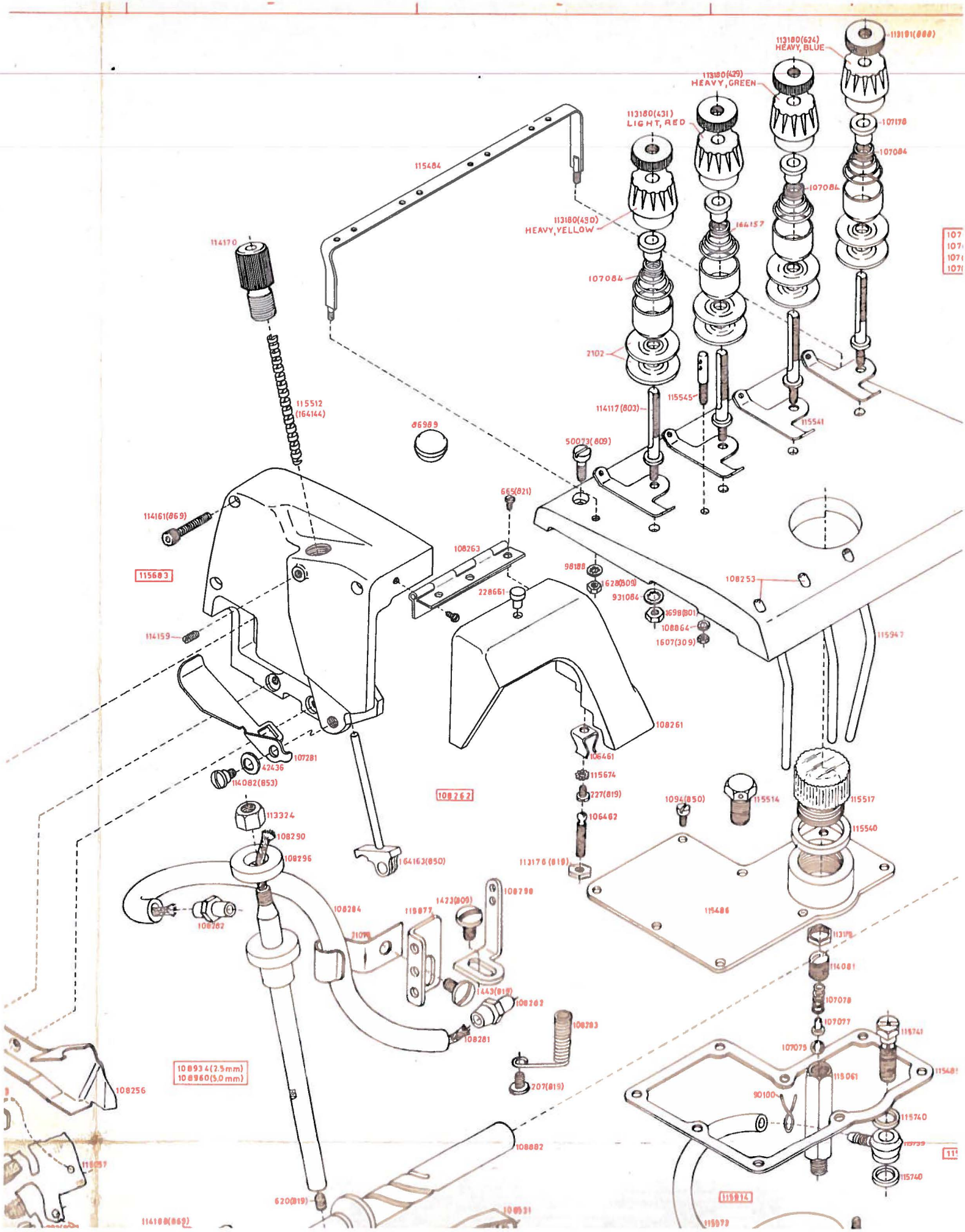

From the library of: Superior Sewing Machine & Supply LLC

CHAIN CUTTER RETRO-FIT KIT NO. 115622

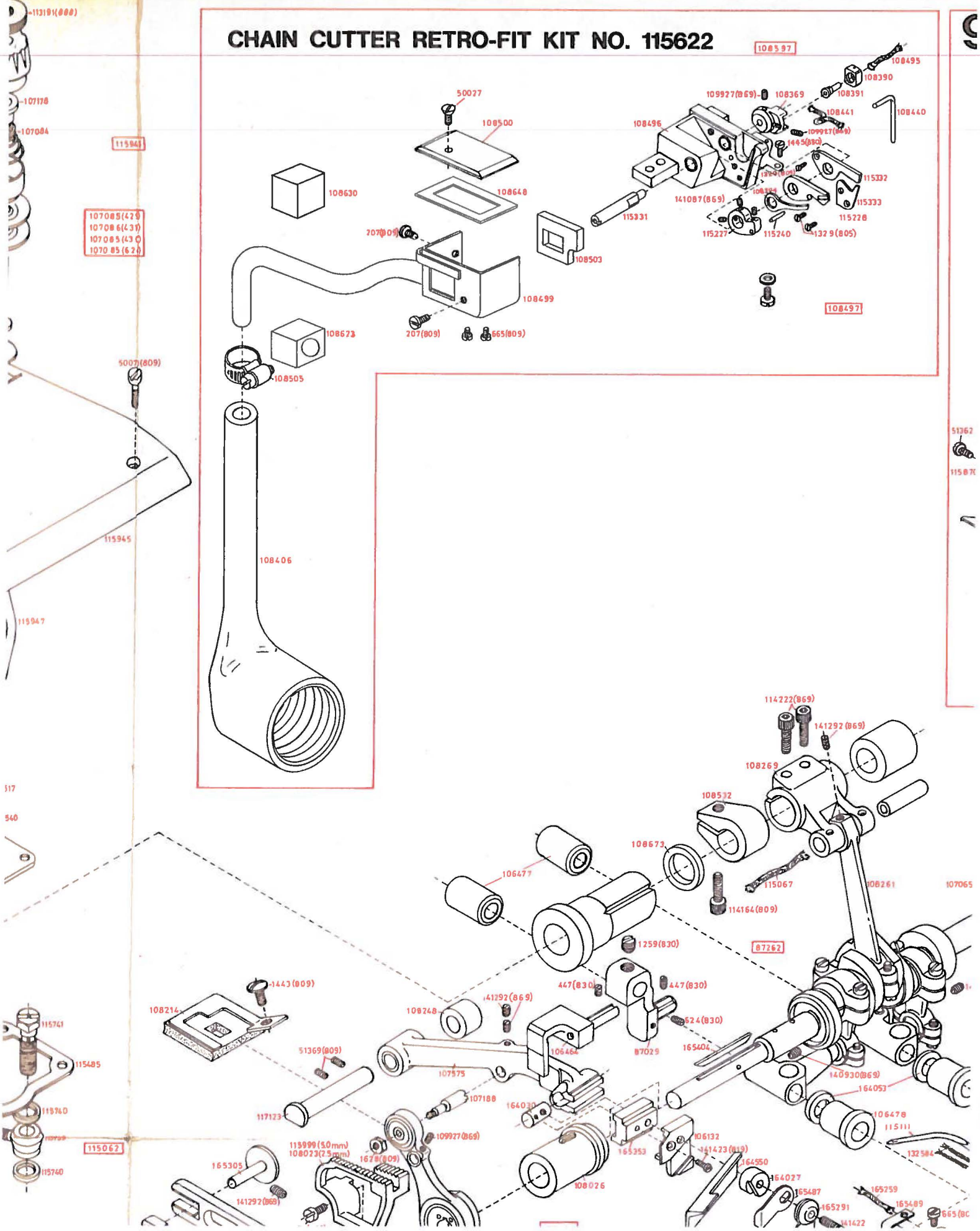

From the library of: Superior Sewing Machine & Supply LLC

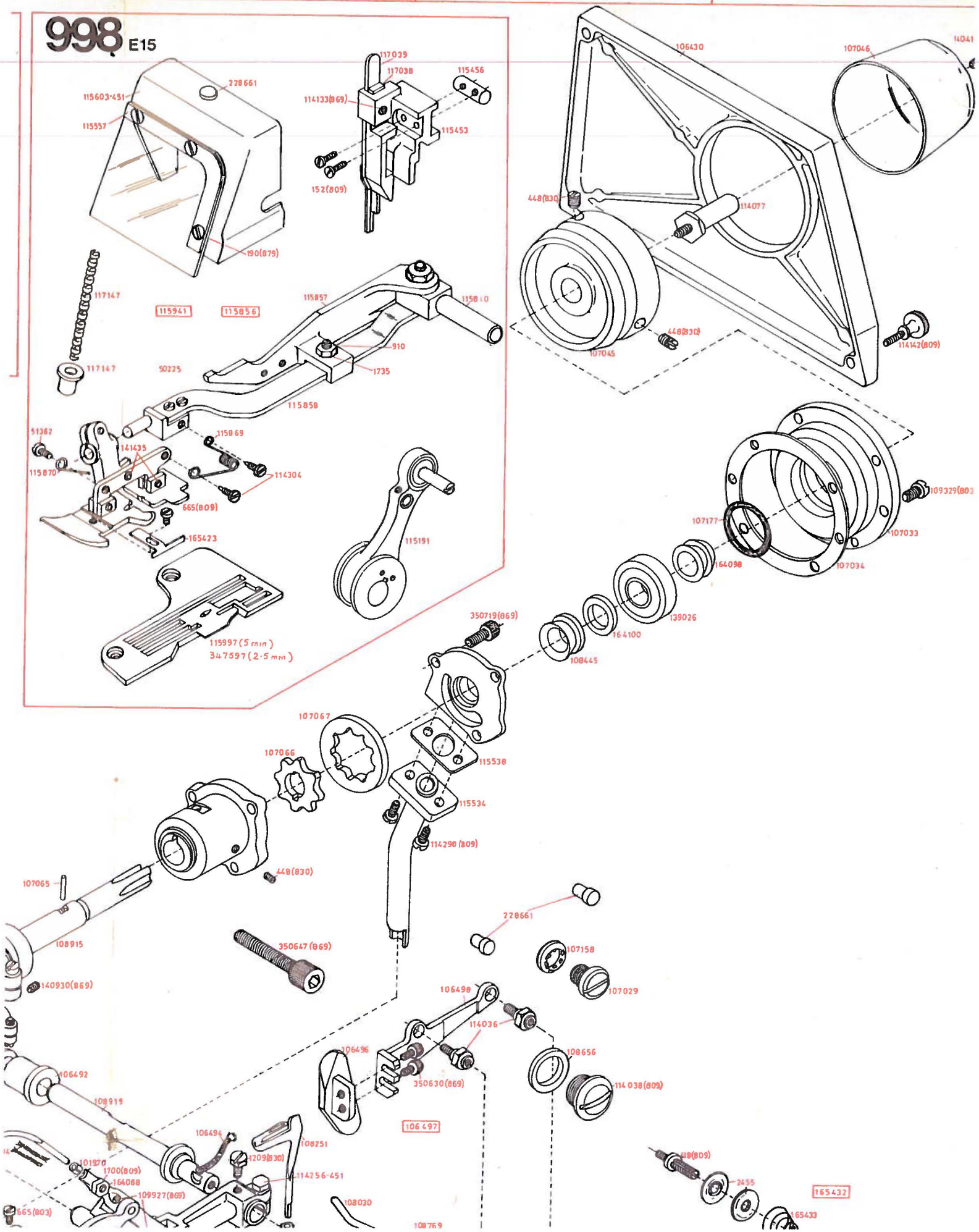

From the library of: Superior Sewing Machine & Supply LLC

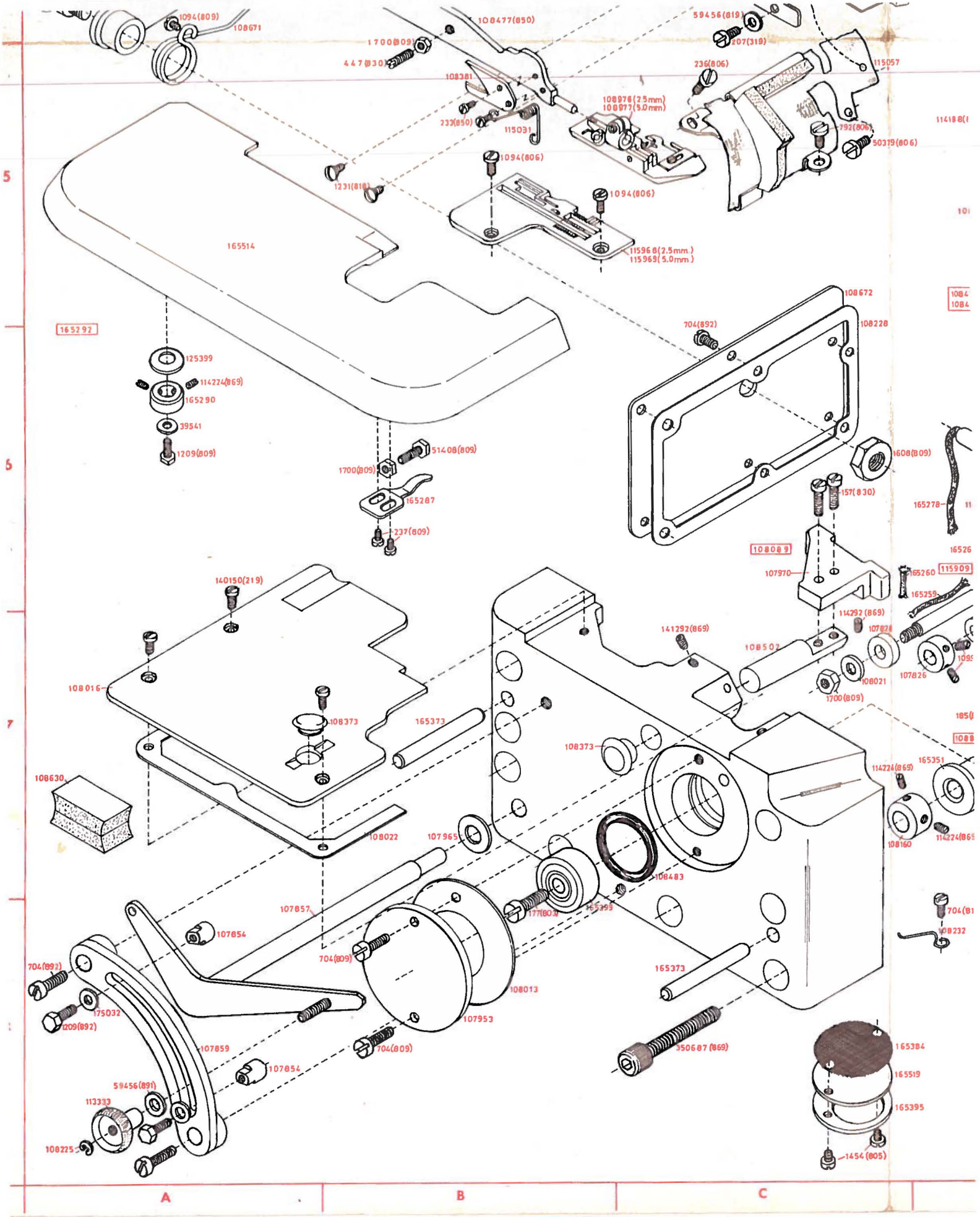

From the library of: Superior Sewing Machine & Supply LLC

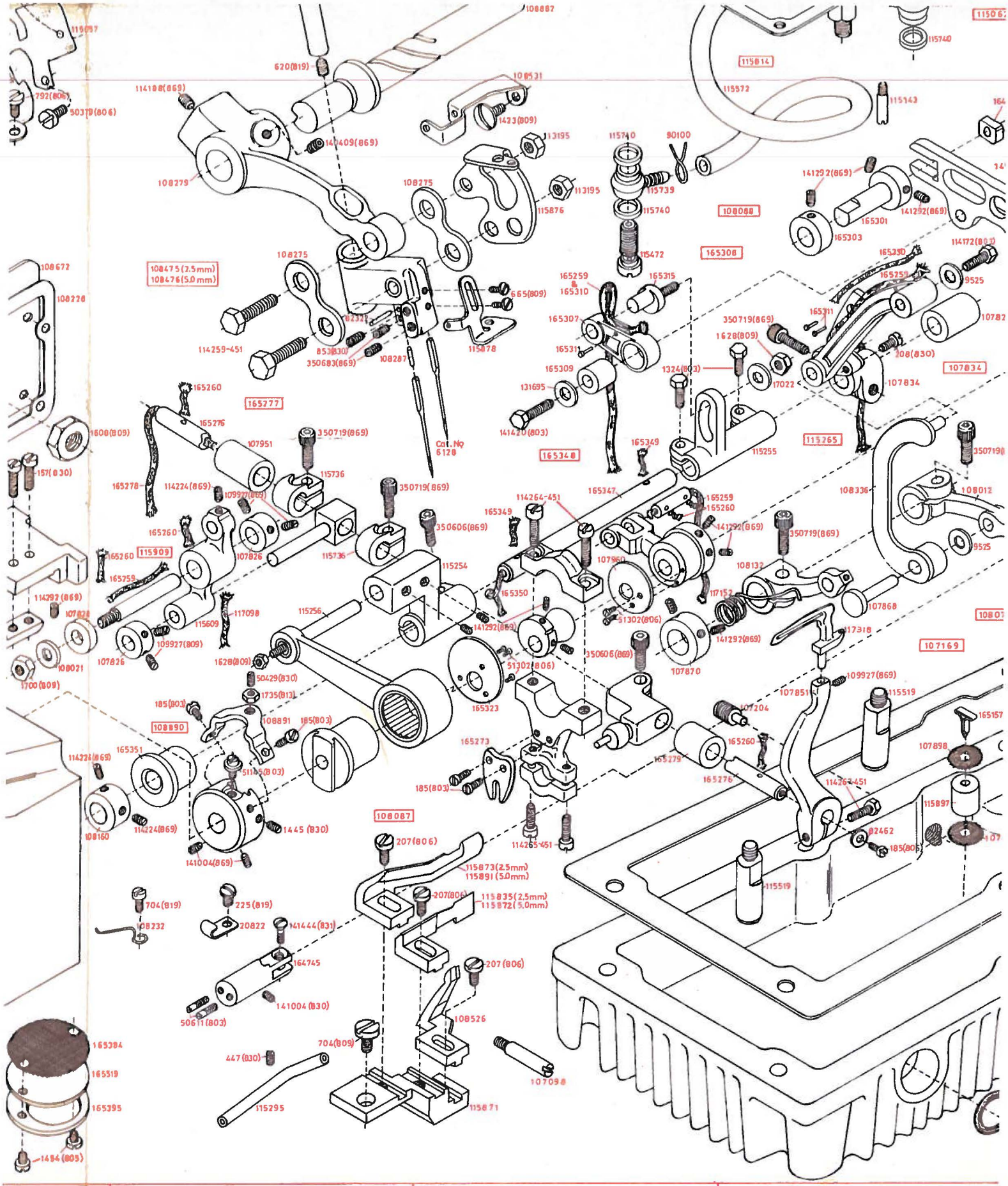

From the library of: Superior Sewing Machine & Supply LLC

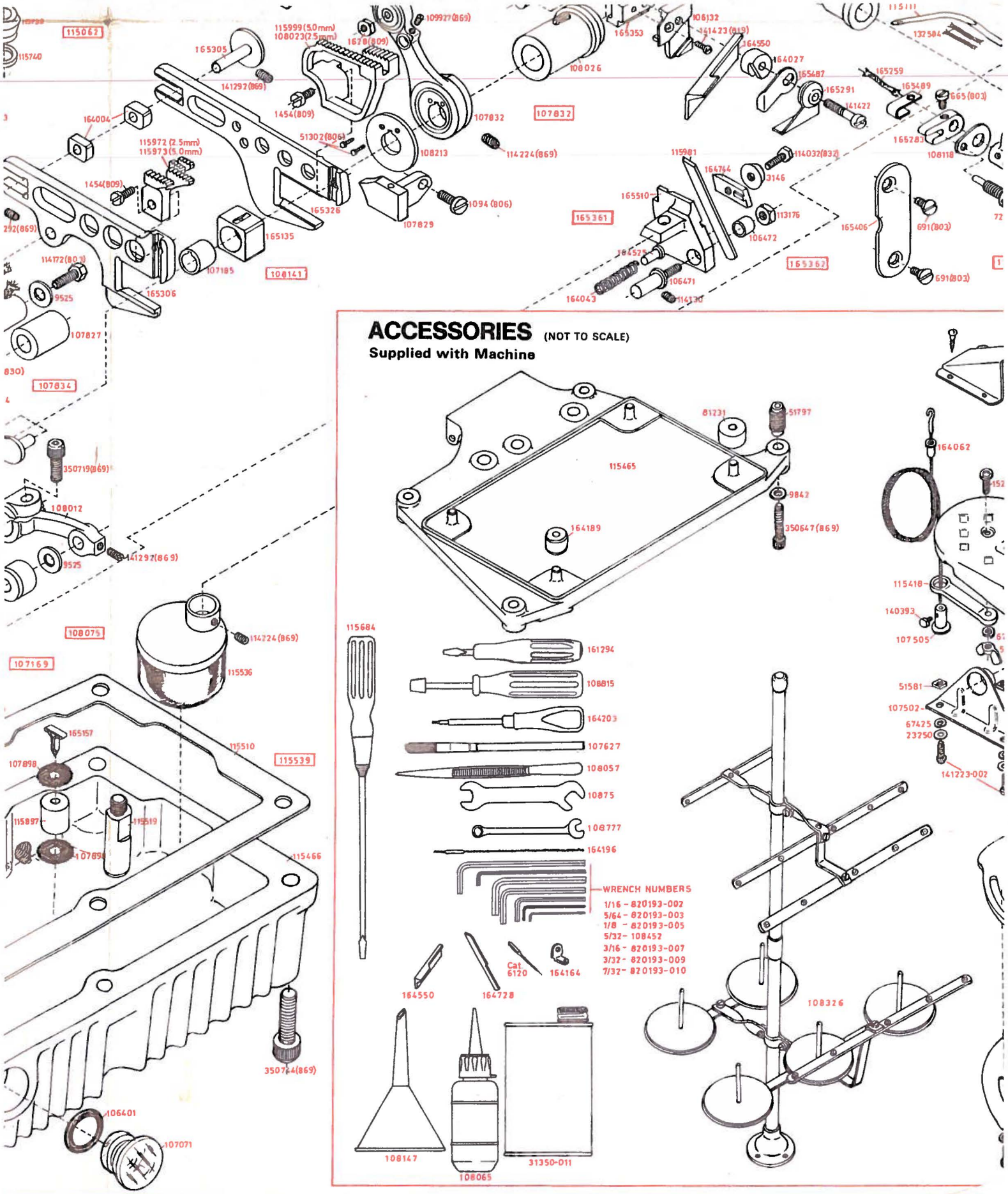

From the library of: Superior Sewing Machine & Supply LLC

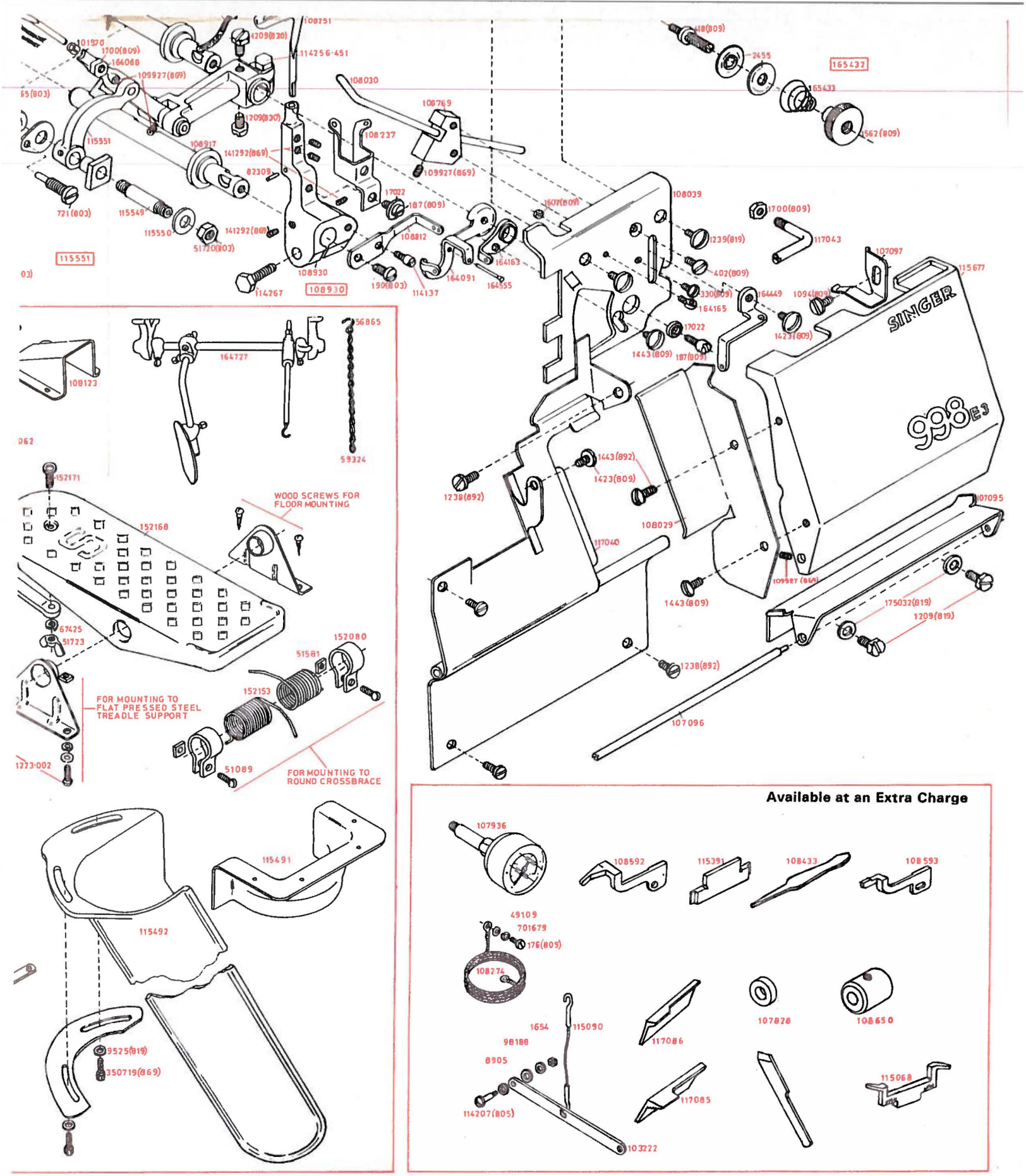

From the library of: Superior Sewing Machine & Supply LLC

PARTS CHART FOR

SINGER*

998 E3 998 E15

MACHINES

PART No.	DESCRIPTION	LOCATION
152(809)	Knife (movable) Holder Screw	E15
157(830)	Feed (back) Bar Guide Bracket Screw	C6
176(809)	Earthing Wire Screw	Acc.
177(803)	Machine Frame Rotary Shaft Extension Screw	B8
185(806)	Auxiliary Looper Shaft Screw	F6
185(803)	Feed Eccentric (adjustable) Stop Plate Screw	D7
185(803)	Auxiliary Looper Driving Connection Locating Plate Screw (2)	E7
187(809)	Auxiliary Looper Thread Guide Securing Screw	K5
187(805)	Thread (looper right hand) Take-up Screw	M6
190(809)	Thread (looper) Take-up Screw (lower)	L5
190(879)	Needle Safety Guard Screw	E15
207(819)	Machine Frame Oil Splash Guard Cover Clamping Plate Securing Screw	C6
207(808)	Needle Guard Screw	D7, E8
207(809)	Chain Cutter Knife Holder and Feed Bar Guide Cover Securing Screw (upper)	C.C.
207(819)	Needle Post Oil Wick Holder Screw	E4
208(830)	Feed (front) Bar Driving Arm Slide Block Plate Screw	F6
225(819)	Looper (right hand) or Spreader Carrier Connecting Link Pin Wick Clip Securing Screw	J5
227(819)	Machine Frame (top) Bracket Cover Spring Screw	E3
233	Chain Cutter Screw (2)	B5
233	Presser Foot Spring Screw	—
236(806)	Machine Frame Oil Splash Guard Securing Screw (upper)	C5
237(809)	Cloth Plate Lock Spring Screw	B6
330(809)	Thread (looper) Plate Thread Tube (long) Support Securing Screw (lower)	L5
356(803)	Knee Lifter Rock Shaft Knee Arm Hub Set Screw	Acc.
356(803)	Knee Lifter Rock Shaft Knee Plate Set Screw	Acc.
402(809)	Thread (looper) Plate Thread Tube (long) Support Securing Screw (upper)	L5
418(809)	Tension (auxiliary looper) Screw Stud	M5
447(830)	Knife (movable) Lever Bearing Set Screw	H4
447(830)	Presser Bar (swing-out) Stop Screw	B5
447(830)	Looper (left hand) Thread Tube (lower) Securing Screw	D8
448(830)	Machine Pulley Set Screw	L1, L2
448(830)	Oil Pump Body Bushing and Machine Frame Rotary Shaft (intermediate) Bushing Set Screw	K4
620(819)	Needle Post Oil Wick Sealing Screw	D5
665(803)	Looper (right hand) or Spreader Carrier Connecting Link Adjusting Screw Pin Spring Clip Screw	J5
665(821)	Machine Frame Top Bracket Cover Hinge Screw (6)	E3
665(809)	Thread Guide Screw (2)	E6
665(809)	Presser Foot Body Guide Screw	—
665(809)	Chain Cutter Knife Holder and Feed Bar Guide Cover Securing Screw (lower)	C.C.
665(809)	Chain Cutter Knife Holder and Feed Bar Guide Oil Deflector Securing Screw (inner)	C.C.
691(803)	Machine Frame Wearing Plate Screw (2)	J5
704(809)	Machine Frame Rotary Shaft Bearing (left) Cover Screw (2)	B8
704(892)	Differential Feed Regulating Plate Securing Screw (2)	A8
704(819)	Feed Driving Shaft Oil Wick Clip Securing Screw	D8
704(892)	Machine Frame Closing Plate (rear) Screw (8)	C6
704(809)	Needle Guard Holder Screw (2)	D8
721(803)	Looper (right hand) or Spreader Carrier Connecting Link Adjusting Screw Pin Pivot Screw	J5
792(804)	Machine Frame Oil Splash Guard Securing Screw (lower)	C5
853(830)	Needle Stop Pin Set Screw	D6
910(830)	Presser Bar (swing out) Arm Spring Adjusting Screw	E16
1094(806)	Feed (front) Bar Wearing Plate Screw	G5
1094(809)	Presser Bar Lifting Lever (long) Tension Spring Securing Screw	A4
1094(819)	Thread (looper) Plate Cover Latch Spring Screw	M5
1094(850)	Machine Frame (top) Bracket Closing Plate Screw (8)	F4
1094(806)	Throat Plate Screw (2)	B5
1100(830)	Feed (back) Dog Section (right) Screw	—

Form K8921 (674) THE SINGER COMPANY Printed in Great Britain

*A Trademark of The Singer Company
Copyright © 1974 by The Singer Company (U.K.) Limited
All rights reserved throughout the world
From the library of: Superior Sewing Machine & Supply LLC

PART No.	DESCRIPTION	LOCATION
1209(819)	Thread (looper) Plate Cover Hinge Bracket Screw (2)	M6
1209(809)	Cloth Plate Hinge Stud Washer Retaining Screw	A6
1209(892)	Differential Feed Regulating Lever Stop Screw (2)	A8
1209(830)	Looper (right hand) or Spreader Driving Lever Clamping Screw	K5
1231(818)	Machine Frame Oil Splash Guard (top) Screw (2)	B5
1238(892)	Chip Guard (stationary) Screw (4)	L6, L7
1239(819)	Thread (looper) Plate Screw (2)	L5
1259(830)	Knife (movable) Lever Bearing and Attachment Bracket Screw	H4
1329(805)	Chain Cutter Knife (stationary) Extension Screw	C.C.
1423(809)	Thread Eyelet (needle thread) Screw	E4
1423(809)	Thread (looper, right hand) Thread Eyelet (movable) Screw	M6
1423(809)	Chip Guard (stationary) Support Bracket Screw	L6
1443(809)	Machine Frame Oil Splash Seal Support Securing Screw	C4
1443(819)	Needle Post Oil Wick Sleeve Retaining Clamp Retaining Screw	E4
1443(892)	Chip Guard (movable) Screw (2)	L6
1443(809)	Thread (looper, right hand) Take-up Eyelet (adjustable) Screw	L6
1445(830)	Feed Eccentric (adjustable) Slide Journal Locking Screw	D7
1445(830)	Chain Cutter Knife Holder and Feed Bar Guide Oil Deflector Securing Screw (front)	C.C.
1454(809)	Feed (back) Dog Screw	F5
1454(809)	Feed (front) Dog Screw	G5
1454(805)	Machine Frame Oil Drain Plate Screw (2)	C6
1520(809)	Thread Unwinder Mounting Tube Bracket Clamping Screw Nut (4)	Acc.
1520(809)	Thread Unwinder Spool Pin Nut (12)	Acc.
1520(809)	Thread Unwinder Thread Eyelet Support Securing Screw Nut	Acc.
1520(809)	Thread Unwinder Thread Guide Holder Screw Nut	Acc.
1520(809)	Auxiliary Looper Avoid Driving Arm Hinge Stud Nut	C7
1562(809)	Tension (auxiliary looper) Regulating Thumb Nut	M5
1607(809)	Thread (looper, right hand) Thread Eyelet (stationary) Nut	L5
1607(809)	Thread (needle) Guide Post Securing Nut	E3
1608(809)	Presser Bar Lifting Lever Lever (long) Hinge Stud Lock Nut	C6
1628(809)	Feed (back) Bar Driving Arm Eccentric Stud Nut	F6
1628(809)	Feed Driving Arm Pin Nut	D7
1628(809)	Knife (movable) Lever Hinge Pin Bearing Lock Nut	G5
1628	Tension Thread Guide Securing Nut	E3
1654	Presser Bar Lifter Operating Arm Bracket Bolt Nut	Acc.
1698(809)	Tension Lock Nut	E3
1700(809)	Cloth Plate Position Bracket Screw Nut	B6
1700(809)	Looper (right hand) or Spreader Locking Screw Stud Nut	K5
1700(810)	Presser Bar Lifting Lever Stop Screw Nut	B3, B4
1700(809)	Thread (looper) Plate Cover Latch Spring Pin Locking Nut	M5
1700(810)	Presser Bar (swing-out) Stop Screw Nut	B5
1735(813)	Feed Eccentric (adjustable) Stop Screw Nut	D7
1735(809)	Presser Bar (swing-out) Arm Spring Adjusting Screw Lock Nut	E15
2102	Tension Disc	E2, F1
2465	Tension (auxiliary looper) Disc	M5
2763	Knee Lifter Rock Shaft	Acc.
2767	Knee Lifter Rock Shaft Knee Plate with 356(803)	Acc.
2770	Knee Lifter Rock Shaft Stop Dog with 356(803)	Acc.
3146	Knife (stationary) Clamping Gib Screw Washer	H5
6337	Knee Lifter Rock Shaft Lifting Bracket with Two 140219(803)	Acc.
8905	Presser Bar Lifter Operating Arm Bracket Washer	Acc.
9525	Differential Feed Driving Arm Stud Washer	F7
9525	Feed (front) Bar Connection Screw Washer	F6
9525(819)	Chip Chute Support Plate Screw Washer	Acc.
9842	Machine Base Mounting Screw Washer (4)	Acc.
10875	Wrench (flat)	Acc.
12242	Knee Lifter Rock Shaft Hanger with Two Wood Screws 1 in No. 10	Acc.
17022	Auxiliary Looper Thread Guide Securing Washer	L5
17022	Feed (back) Bar Driving Arm Eccentric Stud Nut Washer	F6
17022	Thread (looper, right hand) Take-up Screw Washer	M6
20822	Looper (right hand) or Spreader Carrier Connecting Link Adjusting Screw Pin Wick Clip	J5
21079	Needle Post Oil Wick Sleeve Retaining Clamp	D4
23250	Treadle Hinge Bracket Bolt Washer	Acc.
39541	Cloth Plate Hinge Stud Washer	A6
42436	Presser Bar (swing-out) Opening Lever Hinge Screw Washer	D4
48109	Earthing Wire Washer	Acc.
50027(823)	Chain Cutter Knife Holder and Feed Bar Guide Cover (top) Securing Screw	C.C.
50073(809)	Machine Frame Top Cover Screw (2)	E2, F2
50225(809)	Presser Bar (swing-out) Arm Spring Block Securing Screw (2)	E15
50364(832)	Presser Bar Lifting Lever Stop Screw	B3, B4
50379(806)	Machine Frame Oil Splash Guard Cover Securing Screw (front)	C5
50429(830)	Feed Eccentric (adjustable) Stop Screw	D7
50611(803)	Knife (stationary) Holder Position Screw	D8
51082-002	Treadle Hinge Bracket Bolt 141223-002 with 51581	Acc.
51089	Treadle Position Collar Bolt	Acc.
51145(803)	Feed Eccentric (adjustable) Slide Journal Adjusting Screw	D7
51302(806)	Feed Eccentric (adjustable) End Washer	E7
51302(806)	Knife (movable) Eccentric End Washer Securing Screw (2)	G5
51302(806)	Auxiliary Looper Avoid Eccentric End Washer Securing Screw	E7
51362(830)	Presser Foot Spring (front) Securing Screw	E15
51369(809)	Knife (movable) Lever Hinge Stud Set Screw	G4
51369(809)	Presser Bar Lifting Lever Stop Plate Screw	B3
51408(832)	Cloth Plate Position Bracket Screw	B6
51423(850)	Presser Bar Lifting Lever (long) Hinge Stud	A4
51581	Treadle Position Collar Bolt Nut	Acc.
51581	Treadle Hinge Bracket Bolt Nut	Acc.
51720(803)	Looper (right hand) or Spreader Carrier Connecting Link Adjusting Screw Pin Nut	K5
51720(819)	Presser Bar Lifting Lever Hinge Stud Nut	B5
51723	Treadle Extension Wing Nut	Acc.
51797	Machine Base Mounting Screw Insert (4)	Acc.
53663(803)	Presser Foot Extension (hinged) Screw Nut	—
56865	Chain Hook (small)	Acc.
59324	Chain (8 in long) with 56865	Acc.
59456(891)	Differential Feed Regulating Lever Thumb Nut Washer	A8
59456(819)	Machine Frame Oil Splash Guard Cover Clamping Plate Washer	C5
67425	Treadle Extension Wing Nut Lock Washer	Acc.
81231	Machine Cushion (large)	Acc.
81350-011	Tin of Oil (1 pint, Type H)	Acc.
82309	Looper (left hand) Stop Pin	K5
82322	Needle Stop Pin	D6
82462	Auxiliary Looper Shaft Screw Washer	F6
86989	Machine Frame Top Bracket Set Screw Access Hole Plug (rubber)	E2
87029	Knife (movable) Lever Bearing and Attachment Bracket	H4
87059	Spreader (alternative to 115419)	J6

From the library of: Superior Sewing Machine & Supply LLC

PART No.	DESCRIPTION	LOCATION
87262	Knife (movable) Lever Bearing and Attachment Bracket 87029 with 1259(830)	J4
90100	Oil Pipe Retaining Clip	E5, F4
98188	Tension Thread Guide Securing Nut Washer	E2
98188	Presser Bar Lifter Operating Arm Bracket Bolt Washer	Acc.
98930	Machine Frame Rotary Shaft Ball Sleeve Guide	—
101970	Looper (right hand) or Spreader Position Collar	J5
106132	Knife (movable) Holder	H5
106401	Oil Reservoir Oil Sight Guage Seal (O-ring)	F8
106430	Belt Cover	L1
106461	Machine Frame Top Bracket Cover Spring	E3
106462	Machine Frame (top) Bracket Hinged Cover Spring Pin	E3
106464	Knife (movable) Lever Guide	H4
106471	Knife (stationary) Holder Sleeve Stud	J5
106472	Knife (stationary) Holder Sleeve	J5
106476	Looper (right hand) or Spreader Driving Shaft Access Hole Plug	—
106477	Looper (left hand) Driving Shaft Bushing (back)	H4
106477	Looper (right hand) or Spreader Driving Shaft Bushing (back)	H4
106478	Looper (left hand) Driving Shaft Bushing (front)	J4
106492	Looper (right hand) or Spreader Driving Shaft Bushing (front)	J4
106494	Looper (right hand) or Spreader Driving Shaft Oil Wick	K5
106496	Looper (right hand) or Spreader Four Bar Linkage Mechanism Stabiliser	K4
106497	Looper (right hand) or Spreader Four Bar Linkage Mechanism Stabiliser 106496 with 106498 and two 350680(869)	L5
106498	Looper (right hand) or Spreader Four Bar Linkage Mechanism Stabiliser Support Bracket	L4
107027	Machine Frame Hole Plug	—
107029	Machine Frame Oil Pressure Connection Plug	L4
107033	Machine Frame Rotary Shaft Ball Bearing Housing	M2
107034	Machine Frame Rotary Shaft Ball Bearing Housing Gasket	L3
107037	Machine Frame Rotary Shaft Oil Metering Pin	—
107045	Machine Pulley with two 448(830)	L2
107046	Machine Pulley Cap	M1
107055	Needle Driving Shaft Crank Connection Roller (27)	—
107065	Oil Pump Drive Pin	J4
107066	Oil Pump Rotor (inner)	K3
107067	Oil Pump Rotor (outer)	K3
107071	Oil Reservoir Oil Sight Guage	G8
107075	Oil Pump Relief Valve	F4
107077	Oil Pump Relief Valve Plunger	F4
107078	Oil Pump Relief Valve Spring	E4
107081	Presser Bar (swing-out) Opening Lever	D4
107084	Tension (heavy) Spring	F1
107085(430)	Tension (heavy) Complete (yellow) Nos. 107084, 107178, 107625, 113180(430), 113191(888), 141117(803) and two 2102	E1
107085(624)	Tension (heavy) Complete (blue) Nos. 107084, 107178, 107625, 113180(624), 113191(888), 114117(803) ahd two 2102	F1
107085(429)	Tension (heavy) Complete (green) Nos. 107084, 107178, 107625, 113180(429), 113191(888), 114117(803), 164157 and two 2102	F1
107086(431)	Tension (light) Complete (red) Nos. 107178, 107625, 113180(431), 113191(888), 114117(803), 164157 and two 2102	F1
107095	Thread (looper) Plate Cover Hinge Bracket	M6
107096	Thread (looper) Plate Cover Hinge Pin	M7
107097	Thread (looper) Plate Cover Latch Spring	M5
107098	Cloth Plate Lock Spring Retaining Screw Stud	E8
107158	Machine Frame Oil Pressure Guage Connection Plug Gasket	L4
107169	Oil Return Filter (front) Complete with 107898, 115898 and 165157	E7
107177	Machine Frame Rotary Shaft Ball Bearing Retaining Ring	M2
107178	Tension Spring Bushing	E1, F1
107185	Feed Lifting Eccentric	G5
107188	Knife (Movable) Lever Hinge Pin	H4
107204	Oil Reservoir Drain Plug	F7
107501	Foot Lifter Operating Cable	Acc.
107502	Treadle Hinge Bracket	Acc.
107505	Foot Lifter Operating Cable Retaining Collar with 140893	Acc.
107512	Treadle Hinge Bracket 107502 with two each 23250, 41082-002 and 67425	Acc.
107513	Foot Lifter Operating Cable Complete Nos. 107501 and 107505	Acc.
107546	Treadle 115420 with two 107502, four each 23250, 51082-002 and 67425	Acc.
107575	Knife (movable) Lever with two 141292(869)	H4
107625	Tension Spring Cover	E2, F1
107626	Treadle 115420 with two 107502 and four Wood Screws ¾ in (19mm) No. 12 R.H.	Acc.
107627	Lint Cleaning Brush	Acc.
107828	Auxiliary Looper Avoid Driving Arm Retaining Collar with two 109927(869)	D7
107826	Auxiliary Looper Avoid Driving Arm Slide Block Collar with two 109927(869)	D7
107827	Feed Driving Shaft Bushing (right)	F8
107828	Auxiliary Looper Avoid Driving Arm Thrust Washer	D7
107828	Looper (left hand) Guage Distance Piece (available at an extra charge)	Acc.
107829	Feed (front) Bar Wearing Plate	G5
107832	Knife (movable) Lifting Lever with 1628(809), 107188, 108213, 114224(869) and two 51302	G5
107834	Feed (front) Bar Connection with 165259, 165330, 350719(869), two 208(830) and 165311	F8
107851	Auxiliary Looper Carrier with 114287(451) and 109927(869)	F7
107854	Differential Feed Regulating Lever Stop (2)	A8
107857	Differential Feed Regulating Lever	A8
107859	Differential Feed Regulating Plate	A8
107868	Differential Feed Driving Arm Stud	F7
107870	Differential Feed Regulating Lever Shaft Collar with 141292(869)	E7
107898	Oil Return Filter (front) Screen (upper)	F7
107898	Oil Return Filter (front) Screen (lower)	F7
107936	Oil Pressure Gauge	Acc.
107950	Feed (back) Dog (2.5mm) and (5.0mm) Section (right)	—
107951	Auxiliary Looper Shaft Bushing (rear)	D6
107953	Machine Frame Rotary Shaft Bearing (left) Cover	B8
107960	Auxiliary Looper Avoid Eccentric End Washer	E6
107965	Differential Feed Regulating Lever Shaft Oil Ring	B7
107970	Feed (back) Bar Guide Bracket	C6
108012	Differential Feed Driving Arm with 350719(869) and 141292(869)	F8
108013	Machine Frame Rotary Shaft Bearings (left) Cover Gasket	B8
108021	Auxiliary Looper Avoid Driving Arm Hinge Stud Securing Nut Washer	C7
108022	Machine Frame Oil Splash Cover (top) Gasket	A7
108023	Feed (front) Dog (2.5mm) Supplied with machine unless otherwise specified on order.	G5
108026	Machine Frame Rotary Shaft Bushing (front)	H4
108029	Chip Guard (movable)	L6

From the library of: Superior Sewing Machine & Supply LLC

PART No.	DESCRIPTION	LOCATION
108030	Thread (looper) Plate Thread Tube (long)	L5
108031	Thread (looper) Plate	L5
108032	Thread (looper) Plate 108031, with 330(809), 402(809), 108030, 108769, 164163, 164165, 164449 and two 1443(809)	L5
108051	Tweezers	Acc.
108055	Dust Cover (available at an extra charge)	Acc.
108065	Oil Dispenser	Acc.
108075	Differential Feed Driving Arm 108012 with 9525 and 107868	F7
108087	Feed Eccentric (adjustable) with 1445(830), 51145(830), 165329, two 141004 and three 51302(809)	D7
108088	Feed Bar Hinge Pin (eccentric) 165301, with 165303 and two 164004	F6
108089	Feed (back) Bar Guide Bracket 107970 with 108502 and two 157(830)	C6
108115	Allen Wrench (with plastic handle)	Acc.
108118	Looper (right hand) or Spreader Carrier Connecting Link Stop Nut Oil Seal	J5
108123	Belt Cover (rear)	Acc.
108132	Differential Feed Regulating Lever Return Spring Arm with 350719(869)	F7
108141	Feed (back) and (front) Bars Complete Nos. 108088, 165136, 165306 and 165326	G6
108147	Oil Funnel	Acc.
108160	Feed Driving Shaft Position Collar with two 114224(869)	D7
108213	Knife (movable) Eccentric End Washer	G5
108214	Machine Frame Oil Splash Seal Support	G4
108222	Presser Bar Lifter Operating Arm	Acc.
108224	Earthing Wire	Acc.
108225	Differential Feed Regulating Lever Thumb Nut Retainer	A8
108228	Machine Frame Closing Plate (rear) Gasket	C6
108232	Feed Driving Shaft Oil Wick Clip	D8
108237	Auxiliary Looper Thread Guide	K5
108248	Knife (movable) Lever Spacer	H4
108251	Looper (left hand)	K5
108253	Looper (left hand) Thread Tube (upper)	F3
108253	Thread (looper, right hand) Tube (upper)	F3
108256	Machine Frame Oil Splash Guard (top)	C4
108261	Machine Frame (top) Bracket Cover (hinged)	E3
108262	Machine Frame (top) Bracket Cover (hinged) 108261 with 227(819), 106451, 108263, 228661 and three 665(821)	E3
108263	Machine Frame (top) Bracket Cover Hinge	E3
108269	Needle Driving Shaft Crank	J3
108271	Needle Driving Shaft Crank Connection with 107055	J4
108275	Needle Holder Driving Link	D5, E5
108279	Needle Holder Driving Lever with 114259(451) and 113195	D5
108281	Needle Post Oil Wick (long)	D2, E2
108282	Needle Post Oil Wick Connection Connection	D4, E4
108283	Needle Post Oil Wick Holder	E4
108284	Needle Post Oil Wick Sleeve	D4
108286	Needle Post Washer	D3
108287	Needle Holder Stop Pin (adjustable)	D6
108289	Presser Bar Lifting Lever (short)	C4
108290	Needle Post Oil Wick (short)	D3
108291	Presser Bar Lifting Lever Shaft	B4
108292	Presser Bar Lifting Lever Shaft Bushing	B4
108293	Presser Bar Lifting Lever (short) Collar with 114091(869)	B4
108295	Presser Bar Lifting Lever Stop Plate	B4
108298	Thread Eyelet (needle thread)	E4
108311	Thread Unwinder Spool Pin (5)	Acc.
108312	Thread Unwinder Spool Rest (5)	Acc.
108314	Thread Unwinder Spool Rest Support (lower rear)	Acc.
108315	Thread Unwinder Spool Rest Support (lower front)	Acc.
108318	Thread Unwinder Mounting Tube End Plug	Acc.
108320	Thread Unwinder Mounting Tube Bracket (4)	Acc.
108321	Thread Unwinder Thread Guide Holder	Acc.
108322	Thread Unwinder Thread Eyelet (21)	Acc.
108323	Thread Unwinder Mounting Tube	Acc.
108324	Thread Unwinder Thread Eyelet Support (upper) (front) with six 108322 and 117008	Acc.
108324	Thread Unwinder Thread Guide with six 108322 and 117008	Acc.
108325	Thread Unwinder Thread Eyelet Support (upper) (rear) with three 108322 and 117008	Acc.
108326	Thread Unwinder (five spools) complete Nos. 108314, 108315, 108318, 108323, 108325, two 108321, three 108324, four 108320, five each 108311, 108312, 150203, nine 114097(809), twenty-one 1520(809), four Wood Screws 1¼ in No. 12 R.H.	Acc.
108336	Differential Feed Driving Arm Connecting Link Complete	F6
108373	Machine Frame Oil Splash Cover (top) Access Plug	A7
108373	Machine Frame End Cover Hole Plug	B7
108381	Chain Cutter	B5
108389	Chain Cutter Knife (movable) Driving Fork with two 109927(869)	C.C.
108390	Chain Cutter Knife (movable) Driving Slide Block	C.C.
108391	Chain Cutter Knife (movable) Driving Slide Block Stud with 108495	C.C.
108394	Chain Cutter Knife (movable) Spring	C.C.
108406	Chain Cutter Suction Pipe	C.C.
108433	Feeler Gauge	Acc.
108441	Chain Cutter Knives Oil Wick	C.C.
108445	Oil Pump Cover Oil Seal	L3
108452	Wrench (long) for 5/32 in Socket Head Screw	Acc.
108475	Needle Holder (2.5 mm) with 620(819), 853(830), 82322, 108287, 108290, 113195 and two 350683	D5
108476	Needle Holder (5mm) with 620(819), 853(830), 82322, 108287, 108290, 113195 and two 350683	D5
108477(850)	Presser Bar (swing-out)	B5
108478	Presser Foot Clamp (swivel) with 141441	—
108483	Machine Frame Rotary Shaft Bearing (left) Retaining Ring	C7
108495	Chain Cutter Knife (movable) Driving Slide Block Stud Wick	C.C.
108496	Chain Cutter Knife Holder and Feed Bar Guide	C.C.
108497	Chain Cutter Assembly Nos. 50027(825), 108394, 108441, 108498, 108499, 108503, 108697, 108623, 115227, 115240, 115331, 115332, 115333, two each 207(809), 665(809) and three 1329(805)	C.C.
108499	Chain Cutter Knife Holder and Feed Bar Guide Cover	C.C.
108500	Chain Cutter Knife Holder and Feed Bar Guide Cover (top)	C.C.
108502	Feed (back) Bar Guide Pin	C6
108503	Chain Cutter Knife Holder and Feed Bar Guide Cover Seal (inner)	C.C.
108504	Machine Frame Oil Splash Cover with 108022	C.C.
108526	Needle Guard (overedge needle)	E8
108531	Thread Eyelet (needle thread) Bridge	E5
108532	Needle Driving Shaft Position Collar with 114164(869)	J3
108585	Chain Cutter Suction Pipe Clip	C.C.
108592	Looper (left hand) Gauge (available at an extra charge)	Acc.
108593	Auxiliary Looper Gauge (available at an extra charge)	Acc.
108597	Chain Cutter Knife (movable) Driving Fork 108389 with 108390 and 108391	C.C.

From the library of: Superior Sewing Machine & Supply LLC

PART No.	DESCRIPTION	LOCATION
108023	Chain Cutter Holder and Feed Bar Guide Cover Suction Tube Oil Seal	C.C.
108024	Cloth Plate	C.C.
108026	Machine Frame Oil Splash Guard	C.C.
108027	Machine Frame Oil Splash Seal Support	C.C.
108030	Machine Frame Oil Seal	H2
108048	Chain Cutter Knife Holder and Feed Bar Guide Cover (top) Gasket	C.C.
108049	Cloth Plate Complete Nos. 1700(809), 51408(832), 108024, 165287 and two 237(809)	C.C.
108050	Auxiliary Looper Shaft (positioning) Gauge (available at an extra charge)	Acc.
108054	Feed (back) Dog Section (left) (2.5mm)	C.C.
108056	Oil Pump Body Clamping Screw Plug Screw Washer	L4
108057	Feed (back) Dog (2.5mm) Complete Nos. 1100(803), 107950 and 108054	C.C.
108069	Presser Bar Lifting Lever (long) Connection Rod	A4
108070	Presser Bar Lifting (long) Connection Rod Cotter Pin (2)	A4
108071	Presser Bar Lifting Lever (long) Tension Spring	A5
108072	Machine Frame Closing Plate (rear)	C6
108073	Needle Driving Shaft Bushing (front) Thrust Washer	H3
108769	Thread (looper) Plate Thread Tube (long) Support	L5
108777	Wrench Combination	Acc.
108807	Thread (looper) Plate 108031 with 330(809), 402(809), 108030 and 108769	L5
108811	Auxiliary Looper Driving Connection with 165273 and two 185(803)	E7
108812	Thread (looper) Take-up	L5
108804	Thread (needle) Guide Post Securing Nut Washer	E3
108864	Chain Cutter Knife Holder and Feed Bar Guide Oil Deflector Securing Screw (inner) Washer	C.C.
108882	Needle Driving Shaft (replacement) Assembly	D5
108890	Feed Eccentric (adjustable) and Stop Plate (complete) Nos. 108087, 108891 and two 185(803)	D7
108891	Feed Eccentric (adjustable) Stop Plate with 1735(813) and 50429(830)	D7
108915	Machine Frame Rotary Shaft complete	J4
108917	Looper (left hand) Driving Shaft	K5
108919	Looper (right hand) or Spreader Driving Shaft with 108494	K4
108930	Looper (left hand) Carrier with 82309, 114267(451) and four 141292(869)	K5
108934	Needle Holder Driving Lever (2.5 mm assembly)	D4
108960	Needle Holder Driving Lever (5mm) assembly)	D4
108976	Presser Foot (2.5 mm) Complete Nos. 115031, 220(809), 141435 and 108478	C5
108977	Presser Foot (5mm) Complete Nos. 115031, 220(809), 141435 and 108478	C5
108329(803)	Machine Frame Rotary Shaft Ball Bearing Housing Screw (4)	M2
109927(869)	Looper (right hand) or Spreader Carrier Connecting Link Hinge Pin Set Screw	K5
109927(869)	Thread (looper) Plate Cover Hinge Pin Locking Screw	M6
109927(869)	Auxiliary Looper Avoid Driving Arm Retaining Collar Set Screw	D7
109927(869)	Auxiliary Looper Avoid Driving Arm Slide Block Collar Set Screw	D7
109927(869)	Auxiliary Looper Set Screw	F7
109927(869)	Thread (looper) Plate Thread Tube (long) Securing Screw	L5
109927(869)	Chain Cutter Knife (movable) Driving Fork Set Screw	C.C.
109927(869)	Chain Cutter Knife (movable) Driving Slide Block Stud Set Screw	C.C.
113176	Knife (stationary) Holder Sleeve Stud Lock Nut	J5
113176(819)	Machine Frame (top) Bracket Hinged Cover Spring Pin Lock Nut	E4
113179(805)	Oil Pump Relief Valve Spring Screw Stud Locking Nut	F4
113180(429)	Tension (heavy) Regulating Thumb Nut (Green)	F1
113180(430)	Tension (heavy) Regulating Thumb Nut (yellow)	E1
113180(431)	Tension (light) Regulating Thumb Nut (red)	F1
113180(624)	Tension (heavy) Regulating Thumb Nut (blue)	F1
113191(888)	Tension Regulating Thumb Nut Lock Nut	E1, F1
113195	Needle Holder Driving Link Hinge Screw Nut	E5
113195	Needle Holder Driving Lever Hinge Screw Nut	E5
113324(850)	Needle Post Lock Nut	D3
113333	Differential Feed Regulating Lever Thumb Nut	A8
114032	Knife (stationary) Clamping Gib Screw	J5
114036	Looper (right hand) or Spreader Four Bar Linkage Mechanism Stabiliser Securing Screw (2)	L4
114038(809)	Oil Pump Body Clamping Screw Hole Plug Screw	L4
114077	Machine Frame Rotary Shaft Screw Stud	L1
114081(805)	Oil Pump Relief Valve Spring Screw Stud	F4
114082(853)	Presser Bar (swing-out) Opening Lever Hinge Screw	D4
114091(869)	Presser Bar Lifting Lever (short) Collar Set Screw	B4
114092(803)	Looper (left hand) Driving Shaft Crank Clamping Screw	—
114092(803)	Looper (right hand) or Spreader Driving Shaft Crank Clamping Screw	—
114097(809)	Thread Unwinder Mounting Tube Bracket Clamping Screw (4)	Acc.
114097(809)	Thread Unwinder Spool Rest Support (lower rear) Securing Screw	Acc.
114097(809)	Thread Unwinder Thread Eyelet Support Securing Screw	Acc.
114097(809)	Thread Unwinder Thread Guide Holder Screw	Acc.
114117(803)	Tension (light) Screw Stud	E2, F2
114130	Knife (stationary) Holder Sleeve Stud Set Screw	H5
114133(869)	Knife (movable) Support Locating Screw	E15
114137(803)	Thread (looper) Take-up Screw	L5
114142(809)	Belt Cover Screw (2)	L2
114159	Pressure Regulating Thumb Screw Lock Screw	D3
114161(869)	Presser Bar Housing Screw (3)	D2
114164(869)	Needle Driving Shaft Position Collar Set Screw	J4
114170	Pressure Regulating Thumb Screw	D1
114172(803)	Feed (front) Bar Connection Screw	F6
114188(869)	Needle Holder Driving Lever Locating Screw	D5
114222(869)	Needle Driving Shaft Crank Clamping Screw	J3
114224(869)	Auxiliary Looper Avoid Driving Arm Set Screw	D6
114224(869)	Cloth Plate Position Collar Set Screw	B6
114224(869)	Knife (movable) Eccentric Set Screw	H5
114224(869)	Oil Pump Suction Filter Collar Screw	G7
114224(869)	Presser Bar Lifting Shaft Collar Set Screw	C4
114224(869)	Chain Cutter Knife Holder and Feed Bar Guide Pin Securing Screw	C.C.
114224(869)	Feed Driving Shaft Position Collar Set Screw	D7
114256(451)	Looper (right hand) or Spreader Driving Lever Clamping Screw	K5
114258(451)	Looper (left hand) Driving Shaft Crank Connection Cap (upper) Screw	—
114258(451)	Looper (right hand) or Spreader Driving Shaft Crank Connection Cap (upper) Screw	—
114259(451)	Needle Holder Driving Link Hinge Screw	D6
114259(451)	Needle Holder Driving Lever Hinge Screw	D6
114263(451)	Looper (left hand) Driving Shaft Crank Connection Cap (lower) Screw	—
114263(451)	Looper (right hand) or Spreader Driving Shaft Crank Connection Cap (lower) Screw	—
114264(451)	Auxiliary Looper Driving Connection Screw (upper)	E6
114264(451)	Needle Driving Shaft Crank Connection Cap (lower) Screw	—
114265(451)	Auxiliary Looper Driving Connection Screw (lower)	E7
114267(451)	Looper (left hand) Carrier Clamping Screw	K5
114267(451)	Auxiliary Looper Carrier Clamping Screw	F7
114287(805)	Presser Bar Lifter Operating Arm Bracket Bolt	Acc.
114290(809)	Oil Pump Suction Pipe Securing Screw	L3

From the library of: Superior Sewing Machine & Supply LLC

PART No.	DESCRIPTION	LOCATION
114292(869)	Looper (left hand) Carrier Set Screw	K5
114292(869)	Machine Frame Hole Plug Screw	—
114298(830)	Feed (back) Bar Driving Arm Clamping Screw	F6
114304(803)	Presser Foot Spring (rear) Securing Screw (2)	E15
115031	Presser Foot Spring	—
115053	Machine Frame Oil Splash Guard Cover Clamping Plate	C.C.
115057	Machine Frame Oil Splash Guard	C6
115061	Oil Pump Relief Valve Body	F4
115062	Oil Pump Relief Valve Complete Nos. 107075, 107076, 107077, 115061, 113179(805) and 114061(805)	F4
115067	Needle Driving Shaft Crank Hinge Pin Wick	J4
115068	Gauge (accessories) Low Lift (available at an extra charge)	Acc.
115090	Presser Bar Lifter Connecting Cable	Acc.
115111	Looper (right hand) (alternative to 87059)	J5
115143	Oil Pipe Guard Pin	E6
115191	Knife (movable) Lifting Lever Assembly	E15
115207	Machine Frame Oil Splash Guard (top)	C.C.
115217	Chain Cutter Knife Holder and Feed Bar Guide Oil Deflector	C.C.
115227	Chain Cutter Knife (movable) Shaft Drive Collar with three 141087(869)	C.C.
115228	Chain Cutter Knife (movable) with 115240	C.C.
115240	Chain Cutter Knife (movable) Driving Pin	C.C.
115254	Feed Driving Arm with 350600(869) and two 141292(869)	E6
115255	Feed (back) Bar Driving Arm with two 114298(830)	F6
115256	Feed Driving Arm Pin	D7
115263	Feed (back) Bar Driving Arm 115255 with 1628(809), 17022 and 165315	F6
115295	Looper (left hand) Thread Tube (lower)	D8
115331	Chain Cutter Knife (movable) Shaft	C.C.
115332	Chain Cutter Knife (stationary)	C.C.
115333	Chain Cutter Knife (stationary) Extension	C.C.
115390	Presser Bar Lifting Lever Hinge Stud	B4
115391	Looper (right hand) Setting Gauge (available at an extra charge)	Acc.
115418	Treadle Extension	Acc.
115420	Treadle 152168 with 61723, 115418, 152171 and 67425	Acc.
115421	Treadle 115420 with 152153 and two 152080	Acc.
115424	Presser Foot Body Guide	—
115453	Knife (movable) Holder with 114133(869)	E15
115456	Knife (movable) Holder Adjustable Stud Block	E15
115465	Machine Base	Acc.
115466	Oil Reservoir	F8
115484	Tension Thread Guide	E1
115485	Machine Frame (top) Bracket Closing Plate Gasket	F4
115486	Machine Frame (top) Bracket Closing Plate	F4
115491	Chip Chute Sleeve	Acc.
115492	Chip Chute	Acc.
115510	Oil Reservoir Gasket	G7
115512	Presser Bar (upright) Spring (heavy)	D2
115514	Oil Breather Plug Screw	F3
115517	Oil Filler Cap and Flow Indicator	F3
115518	Chip Chute Support Plate	Acc.
115519	Machine Frame Support Pin	F7
115520	Presser Bar Lifting Lever (long)	A4
115534	Oil Pump Suction Pipe	L3
115536	Oil Pump Suction Filter	G7
115538	Oil Pump Suction Pipe Gasket	L3
115540	Oil Filler Cap and Flow Indicator Oil Seal	F3
115541	Tension Regulating Thread Guide	E2, F2
115545	Thread (needle) Guide Post	E2
115549	Looper (right hand) or Spreader Carrier Connecting Link Adjusting Screw Pin with 665(803) and 165489	K5
115550	Looper (right hand) or Spreader Carrier Connecting Link Adjusting Screw Pin Washer	K5
115551	Looper (right hand) or Spreader Four Bar Linkage Mechanism Complete, Nos. 1700(809), 108118, 114256(451), 164068, 115549, 115550, 51720(803), two each 109927, 132584, 1209(803)	K5
115556	Needle Safety Guard	E15
115557	Needle Safety Guard Plate	E15
115572	Oil Pipe	F5
115589	Oil Reservoir 115466 with 106401, 107071 and 107204	G7
115600	Needle Safety Guard Complete Nos. 115556, 115557, 115603 and three 1423(809)	E15
115603(451)	Needle Safety Guard Mounting Cover	E15
115622	Retro-fit Chain Cutter Kit Complete Nos. 665(809), 1445(830), 108497, 108504, 108626, 108627, 108649, 108864, 114224(869), 115207, 115217 and 109927(869)	C.C.
115674	Machine Frame (top) Bracket Cover Spring Washer	E3
115677	Thread (looper) Plate Cover with 109927(869)	M6
115678	Thread (looper) Plate Cover 115677 with 1094(819), 107095, 107096, 107097	M6
115683	Presser Bar Housing with 42436, 107081, 114082(853), 114159, 114170, 164143(850) and 115512	D2
115684	Screwdriver	Acc.
115707	Chip Chute Complete Nos. 115492, 115518, two each 350719(869) and 9525(819)	Acc.
115736	Auxiliary Looper Shaft Position Collar (2) with 350719(869)	D6, E6
115739	Oil Pipe Banjo Connection	F4, F5
115740	Oil Pipe Banjo Connection Washer	E5, F4
115741	Oil Pipe Banjo Connection Retaining Screw	F4
115742	Oil Pipe Banjo Connection Retaining Screw (lower)	E5
115814	Oil Pipe 115572 with two 90100 and 115739	F5
115835	Needle Guard (auxiliary needle) (front) (2.5 mm)	E8
115841	Presser Bar Lifter Operating Arm 108222 with 114287(805), 98188, 1654, 115090 and two 8905	Acc.
115856	Machine Frame Oil Splash Guard	E15
115857	Presser Bar (swing-out) Arm with 1735(809) and 910(830)	E15
115858	Presser Bar (swing-out) Arm Spring	E15
115859	Presser Bar (Swing-out) Arm Spring Block	E15
115860	Presser Bar (swing-out) Lifting Lever Shaft	E15
115863	Presser Foot complete (2.5mm) nos. 665(809), 51362(830), 115870, 165423 and three 141435(803)	E15
115864	Presser Foot Complete (5.0mm) nos. 665(809), 51362(830), 115870, 165423 and three 141435(803)	E15
115869	Presser Foot Spring (rear)	E15
115870	Presser Foot Spring (front)	E15
115871	Needle Guard Holder	E8
115872	Needle Guard (auxiliary needle (front) (5mm)	E8
115873	Needle Guard (auxiliary needle) (rear) (2.5mm)	E8

From the library of: Superior Sewing Machine & Supply LLC

PART No.	DESCRIPTION	LOCATION
115876	Thread (needle) Controller	E5
115877	Thread Eyelet (adjustable)	E4
115878	Thread Guide	E6
115897	Oil Return Filter (front) Pad	F7
115909	Auxiliary Looper Avoid Connecting Link Assembly 1520(809), 107828 and 10802	D6
115941	Presser Bar Housing with 42436, 107081, 114082(853), 114170, 164143(850), and 115512	E15
115945	Machine Frame Top Cover with 115947 and two 108253	G2
115946	Machine Top Cover (assembly) nos. 107085(429), 107085(430), 107085(624), 107086(431), 115494, 115545, 115947, 1607, 108864, two 108253, 1628, 98188, four each 1698(809), 931084 and 115541	G1
115947	Thread (auxiliary looper) Tube (upper)	F3
115958	Thread (looper) Plate Cover with 109927(869)	E15
115959	Thread (looper) Plate Cover 115958 with 1094(819), 107095, 107096 and 107097	E15
115968-006	Throat Plate (2.5mm) (3/32 bight)	B5
115968-008	Throat Plate (2.5mm) (1/8 bight)	B5
115968-010	Throat Plate (2.5mm) (5/32 bight)	B5
115968-012	Throat Plate (2.5mm) (3/16 bight)	B5
115969-008	Throat Plate (5mm) (1/8 bight)	B5
115969-010	Throat Plate (5mm) (5/32 bight)	B5
115969-012	Throat Plate (5mm) (3/16 bight)	B5
115969-014	Throat Plate (5mm) (7/32 bight)	B5
115970	Feed (back) Dog (2.5mm) Section (left)	—
115971	Feed (back) Dog (5mm) Section (left)	—
115972	Feed (back) Dog (2.5mm) Complete Nos. 1100(830), 107950, and 115970 Supplied with machine unless otherwise specified on order	G5
115973	Feed (back) Dog (5mm) Complete Nos. 1100(830), 107950 and 115971	G5
115981	Knife (stationary) Wide	H5, F6
115997	Throat Plate (5mm)	E15
115999	Feed (front) Dog (5mm)	G5
117008	Thread Unwinder Thread Eyelet Retaining Circlip	Acc.
117038	Knife (movable) Support	E15
117039	Knife (movable)	E15
117040	Chip Guard (stationary)	L6
117043	Thread (looper) Plate Cover Latch Spring Pin	M5
117082	Knife (stationary) Wide (available at an extra charge)	Acc.
117085	Knife (movable) Serrated (available at an extra charge)	Acc.
117086	Knife (movable) Narrow (available at an extra charge)	Acc.
117098	Auxiliary Looper Avoid Driving Arm Oil Wick	D7
117123	Knife (movable) Lever Hinge Stud	G4
117140	Machine Frame Oil Splash Cover (top) complete with 108022	H7
117146	Presser Bar (upright) Spring Collar	E15
117147	Presser Bar (upright) Spring	E15
117152	Differential Feed Regulating Lever Return Spring	F7
117318	Auxiliary Looper	-F7
120093	Old Pump Suction Filter Hole Plug Screw Extractor Ferrule	Acc.
125399	Cloth Plate Hinge Stud Friction Washer	A6
131695	Feed (back) Bar Connection Screw Washer	E6
132584	Looper (right hand) or Spreader Carrier Connecting Link Hinge Pin Oil Wick	J5
139026	Machine Frame Rotary Shaft Ball Bearing	L3
140150(819)	Machine Frame Oil Splash Cover (top) Securing Screw (3)	A7
140219(803)	Knee Lifter Rock Shaft Lifting Bracket Hook Set Screw	Acc.
140219(803)	Knee Lifter Rock Shaft Lifting Bracket Set Screw	Acc.
140393(—)	Foot Lifter Operating Cable Retaining Collar Screw	Acc.
140416(853)	Machine Pulley Cap Screw	M1
140930(869)	Looper (left hand) Driving Shaft Crank Position Screw	J4
140930(869)	Looper (right hand) Driving Shaft Crank Position Screw	J4
141004(830)	Knife (stationary) Holder Locking Screw	D8
141004(869)	Feed Eccentric (adjustable) Set Screw	D7
141087(869)	Chain Cutter Knife (movable) Driving Pin Securing Screw	C.C.
141087(869)	Chain Cutter Knife (movable) Shaft Drive Collar Set Screw	C.C.
141223-002	Treadle Hinge Bracket Bolt	Acc.
141253(830)	Knee Lifter Rock Shaft Knee Arm Hub Clamping Screw	Acc.
141292(869)	Auxiliary Looper Driving Eccentric Set Screw	F8
141292(869)	Differential Feed Driving Arm Stud Set Screw	F6
141292(869)	Differential Feed Regulating Lever Shaft Collar Set Screw for 107870	E7
141292(869)	Feed Bar Hinge Pin (eccentric) Collar Set Screw	F5
141292(869)	Feed Bar Hinge Pin (eccentric) Positioning Pin Set Screw	G5
141292(869)	Feed Bar Hinge Pin (eccentric) Set Screw	F5
141292(869)	Feed (back) Bar Guide Pin Securing Screw	C7
141292(819)	Feed Driving Arm Pin Securing Screw	E7
141292(869)	Knife (movable) Lever Hinge Pin Set Screw	H4
141292(869)	Looper (left hand) Carrier Adjusting Screw	K5
141292(869)	Needle Driving Shaft Crank Hinge Pin Set Screw	J3
141292(869)	Looper (left hand) Carrier Set Screw	K5
141292(869)	Auxiliary Looper Avoid Driving Arm Hinge Stud Securing Screw	G7
141292(869)	Auxiliary Looper Avoid Eccentric Set Screw	E6
141420(803)	Feed (back) Bar Connection Screw	E6
141422(833)	Knife (movable) Clamp Screw	J5
141423(819)	Knife (movable) Holder Screw	H5
141435(803)	Presser Foot Clamp (swivel) Screw	—
141435(803)	Presser Foot Connecting Link (swivel) Screw	E15
141436(830)	Presser Foot Extension (hinged) Screw	—
141441	Presser Foot Clamp (swivel) Clamp Screw	—
141444(831)	Knife (stationary) Holder Screw	D8
143283	Knee Lifter Rock Shaft Knee Arm	Acc.
147488	Knee Lifter Rock Shaft Complete Nos. 2767, 143283 and 147489	Acc.
147489	Knee Lifter Rock Shaft Knee Arm Hub with 356(803) and 141253(830)	Acc.
150203	Thread Unwinder Spool Rest Cushion (felt) (5)	Acc.
152080	Treadle Position Collar with 51089	Acc.
152153	Treadle Spring	Acc.
152168	Treadle	Acc.
152171	Treadle Extension Swivel Stud	Acc.
161294	Screw Driver (plastic handle) (large)	Acc.
164004	Feed Bar Slide Block (back) (2)	F5
164027(819)	Knife (movable) Clamp	J5
164030	Knife (movable) Holder Screw Bearing	H5
164042	Foot Lifter Operating Cable Friction Sleeve	Acc.
164043	Knife (stationary) Holder Spring	H5
164053	Looper (left hand) Driving Shaft Crank Thrust Bearing	J4
164053	Looper (right hand) or Spreader Driving Shaft Crank Thrust Bearing	J4
164068	Looper (right hand) or Spreader Locking Screw Stud	K5
164091	Thread (looper, right hand) Take-up with 164555	L5
164093	Machine Frame Rotary Shaft Ball Sleeve	—
164098	Machine Frame Rotary Shaft Oil Return and Ball Bearing Grease Retainer	L2
164100	Machine Frame Rotary Shaft Thrust Bearing	L3
164143(850)	Presser Bar (upright)	D2
164144	Presser Bar (upright) Spring Plate Retaining Screw	D2

From the library of: Superior Sewing Machine & Supply LLC

PART No.	DESCRIPTION	LOCATION
164157	Tension (light) Spring	F1
164163	Thread (looper, right hand) Take-up Eyelet (adjustable)	L5
164164	Thread (looper, right hand) Thread Eyelet (movable)	Acc.
164165	Thread (looper, right hand) Thread Eyelet (stationary)	M5
164189	Machine Cushion (small)	Acc.
164196	Threader (6)	Acc.
164203	Oil Pump Suction Filter Hole Plug Screw Extractor	Acc.
164449	Thread (looper, right hand) Thread Eyelet (movable)	M6
164525	Knife (stationary) Holder Spring Stud	H5
164550	Knife (movable)	H5, Acc.
164555	Thread (looper, right hand) Take-up Guide Wire	L5
164727	Knee Lifter Complete Nos. 2783, 6337, 59824, 147488, 164729 and two each 2770, 12242	Acc.
164729	Knee Lifter Rock Shaft Lifting Bracket Hook	Acc.
164744	Knife (stationary) Clamping Gib	H5
164745	Knife (stationary) Holder Body with two 50811(803)	D8
165135	Feed Bar Slide Block (front)	G5
165157	Oil Return Filter (front) Fastener	F7
165259	Auxiliary Looper Avoid Driving Arm Hinge Pin Oil Wick	E6
165259	Auxiliary Looper Avoid Driving Arm Hinge Stud Oil Wick	D7
165259	Feed (back) Bar Connection Oil Wick (long)	E6
165259	Feed (front) Bar Connection Oil Wick (long)	F6
165259	Looper (right hand) or Spreader Carrier Connecting Link Pin Wick	J5
165260	Auxiliary Looper Avoid Driving Arm Hinge Pin Cross Oil Wick	E6
165260	Auxiliary Looper Avoid Arm Hinge Stud Cross Oil Wick	D7
165260	Auxiliary Looper Shaft Cross Wick (2)	F7, D8
165273	Auxiliary Looper Driving Connection Locating Plate	E7
165276	Auxiliary Looper Shaft with 185(806) and 82462	F7
165277	Auxiliary Looper Shaft 165276 with 165278 and two 165260	D8
165278	Auxiliary Looper Shaft Oil Wick	D8
165279	Auxiliary Looper Shaft Bushing (front)	E7
165283	Looper (right hand) or Spreader Carrier Connecting Link Adjusting Screw Pin Locating Nut	J5
165287	Cloth Plate Lock Spring	B6
165289	Cloth Plate Position Collar with two 114224(869)	A6
165290	Presser Bar Lifting Shaft Collar with two 114224(869)	C4
165291	Knife (movable) Guard (lower)	J5
165292	Cloth Plate Complete Nos. 1700(809), 51408(832), 165287, 165514 and two 237(809)	A6
165301	Feed Bar Hinge Pin (eccentric) with two 141292(869)	F5
165303	Feed Bar Hinge Pin (eccentric) Collar with 141292(869)	F5
165306	Feed (back) Bar	F5
165307	Feed (back) Bar Connection	E6
165308	Feed (back) Bar Connection 165307 with 165259, 165310 and 165311	F6
165309	Feed (back) Bar Connection Bushing	E6
165310	Feed (back) Bar Connection Oil Wick (short)	E6
165311	Feed (back) Bar Connection Oil Wick Retaining Pin	E6
165311	Feed (front) Bar Connection Oil Wick Retaining Pin	F6
165315	Feed (back) Bar Driving Arm Eccentric Stud	E6
165323	Feed Eccentric (adjustable) End Washer	E7
165326	Feed (front) Bar	G5
165330	Feed (front) Bar Connection Oil Wick (short)	F6
165347	Feed Driving Shaft	E6
165348	Feed Driving Shaft 165347 with 165350 and two 165349	E6
165349	Feed Driving Shaft Cross Oil Wick	E6
165350	Feed Driving Shaft Oil Wick	E7
165351	Feed Driving Shaft Bushing (left)	D7
165353	Knife (movable) Holder Spacer	H5
165361	Knife (stationary) Holder (adjustable) Complete Nos. 141444(831), 164745 and 165510	H5
165362	Knife (stationary) Holder (adjustable) with Gib Complete Nos. 3146, 114032(832), 164744 and 165361	H5
165373	Machine Frame End Cover Dowel Pin	C8
165373	Machine Frame (top) Bracket Position Dowel Pin	—
165384	Machine Frame Oil Drain Plate Screen	C8
165395	Machine Frame Oil Drain Plate	C8
165399	Machine Frame Rotary Shaft Bearing (left)	B7
165404	Machine Frame Rotary Shaft Key	H4
165406	Machine Frame Wearing Plate	J5
165423	Presser Foot Body Guide Plate	E15
165429	Presser Foot Extension (hinged) Spring	—
165432	Tension (auxiliary looper) Complete Nos. 418(809), 1562(809), 165433 and two 2455	M5
165433	Tension (auxiliary looper) Spring	M5
165487	Knife (movable) Guard (upper)	J5
165489	Looper (right hand) or Spreader Carrier Connecting Link Adjusting Screw Pin Spring Clip	J5
165510	Knife (stationary) Holder	H5
165514	Cloth Plate	A6
165519	Machine Frame Oil Drain Plate Filter (felt)	C8
175032	Differential Feed Regulating Lever Stop Screw Washer (2)	A8
175032	Thread (looper) Plate Cover Hinge Bracket Screw Washer (2)	M6, M7
228661	Thread (looper) Plate Cover Stop (rubber) (2)	L4
228661	Machine Frame (top) Bracket Cover Stop (rubber)	E3
350606(861)	Feed Driving Arm Clamp Screw	E6
350606(869)	Auxiliary Looper Driving Arm Clamp Screw	E7
350647(869)	Oil Pump Body Clamping Screw	K4
350647(869)	Machine Base Mounting Screw (4)	Acc.
350654(869)	Needle Holder Driving Lever Clamping Screw	D5
350656(869)	Feed Eccentric (adjustable) Set Screw	—
350680	Looper (right hand) or Spreader Four Bar Linkage Mechanism Stabiliser Screw	L4
350683(869)	Needle Clamping Screw	D6
350687(869)	Machine Frame End Cover Securing Screw	C8
350687(869)	Machine Frame Top Bracket Set Screw	—
350719(869)	Differential Feed Driving Arm Clamping Screw	F6
350719(869)	Differential Feed Regulating Return Spring Arm Clamping Screw	F6
350719(869)	Feed (front) Bar Driving Arm Screw	F6
350719(869)	Oil Pump Cover Screw	L3
350719(869)	Auxiliary Looper Shaft Position Collar Screw (2)	D6, E6
350719(869)	Chip Chute Support Plate Screw	Acc.
350744(869)	Oil Reservoir Screw (6)	F8, G8
701679	Earthing Wire Screw Washer	Acc.
820193-002	Wrench (regular) for 1/16in Socket Head Screw	Acc.
820193-010	Wrench (regular) for 7/32in Socket Head Screw	Acc.
820193-003	Wrench (regular) for 5/64in Socket Head Screw	Acc.
820193-005	Wrench (regular) for 1/8in Socket Head Screw	Acc.
820193-009	Wrench (long) for 3/32in Socket Head Screw	Acc.
820193-007	Wrench (regular) for 3/16in Socket Head Screw	Acc.
931084	Tension Screw Stud Lock Washer	E3
Cat. 6120	Needle, Size 12 (2)	D6
Cat. 6120	Needle (6) Size 12 (according to Utility being Supplied)	Acc.

From the library of: Superior Sewing Machine & Supply LLC